pöllö
Prime Series

Night Fighter
Illuminate the Darkness!

4 Megapixel Night Fighter Network Bullet Camera

PLC-424M-AU-PV3/PM

H.265 | Full-Color | WDR | AWB | HLC | BLC | Motion Detection | PoE | IP67 | VCA | -30°~60°

Key Features:

- 1/2.9” CMOS Image Sensor
- 2688 × 1520 Pixels 2K Resolution
- 0.0005 Lux Min. Illumination for Day Time Color View
- 30-meter Full Colour View Range
- Motion Detection Alarm Trigger
- Line Crossing Detection
- Region Intrusion Detection
- Highlight Compensation for Image Correction
- Backlight Compensation for Image Correction
- ONVIF Protocol Supported
- IP67 Water & Dust Proofing
- PoE (IEEE802.3af)

Dimensions:

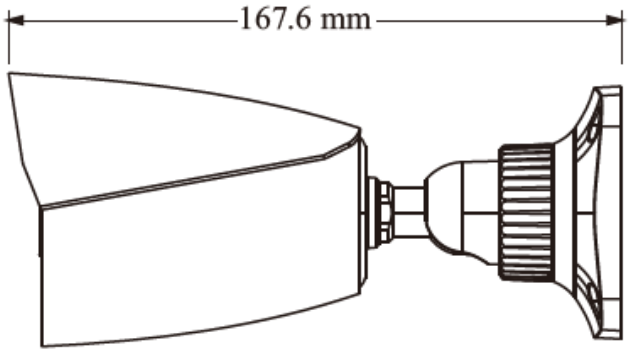

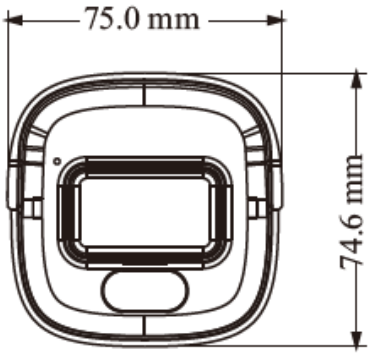

Specifications:

Model	**PLC-424M-AU-PV3/PM**
Image Sensor	1 / 2.9 "CMOS
Image Size	2688 × 1520
Electronic Shutter	Auto or manual mode; manual mode: 1 / 3s ~ 1 / 100000 s
Iris Type	Fixed Iris
Min. Illumination	0.0005 lux F1.0, AGC ON; 0 lux with illumination on
S/N Ratio	≥50dB
Lens	2.8 mm@F1.0, H.FoV: 99°; V.FoV:53°; D.FoV: 119° 3.6 mm@F1.0, H.FoV: 81°; V.FoV: 44°; D.FoV: 96°
Focus	Fixed
Lens Mount	M12
Wide Dynamic Range	120dB
BLC	Yes
HLC	Yes
Defog	Yes
Digital NR	3D DNR
EIS	Yes
Angle Adjustment	Pan: 0°~360°; Tilt:0°~80°; Rotation: 0°~360°
Video Compression	Mainstream: H.265+/ H.265 / H.264+ / H.264 Sub stream/Third stream: H.265+/ H.265 / H.264+ / H.264/ MJPEG
H.264 Compression	Baseline Profile/Main Profile/High Profile
Standard	4MP (2688×1520),2K (2560×1440), 1080P (1920×1080), 720P (1280×720), D1, VGA (640 ×480), 640 ×360, CIF, 480×240
Resolution	4MP (2688×1520),2K (2560×1440), 1080P (1920×1080), 720P (1280×720), D1, VGA (640 ×480), 640 ×360, CIF, 480×240
Mainstream	4MP/2K/1080P(60Hz : 1 ~ 30fps; 50Hz: 1~25fps)
Sub Stream	720P/D1/640 ×360/VGA/CIF/480×240 (60Hz : 1 ~ 30fps; 50Hz: 1~25fps)
Third Stream	720P/D1/640 ×360/VGA/CIF/480×240 (60Hz : 1 ~ 30fps; 50Hz: 1~25fps)
Bit Rate	32 Kbps ~8 Mbps
Bit Rate Type	VBR / CBR
Audio Compression	G711A / U
Image Settings	VBR / CBR
ROI	Each ROI to be configured separately
Network	RJ 45 (10/100 Base-T)
Video Output	No
Audio	1CH audio input; 1CH built-in microphone
Storage	Built-in micro SD card slot; up to 512GB

Reset	Yes
Alarm	no
Smart Event	Line crossing, region intrusion/entrance/exiting (human/vehicle classification), abandoned/ missing object detection
Statistics	Target counting by line (human/vehicle classification)
Exception Detection	Scene change, video blur and abnormal color detection, audio exception
Face Detection	Face detection, face capture
Remote Monitoring	Web Client/POLLO NVR/PVMS Plus /mobile APP
Web Browser	Chrome 92.0+/Edge 92.0+/Firefox 91.0+/Safari 13.1+
Online Connection	Support simultaneous monitoring for up to 10 users; Support multi-stream real time transmission
Network Protocol	UDP, IPv4, IPv6, DHCP, NTP, RTSP, RTP, RTCP, RTMP, FTP, PPPoE, DDNS, SMTP, SNMP, HTTP, 802.1x, UPnP, HTTPS, HTTP POST, P2P, QoS
Interface Protocol	ONVIF
API & SDK	Yes
Storage	Network remote storage; micro-SD card storage
Smart Alarm	Motion detection, SMD, SD card error, SD card full, IP address conflict, Network disconnection
General Function	Watermark, video mask, heartbeat, image distortion correction, corridor pattern, ANR, cloud upgrade, disarming
Security	Video encryption, firmware encryption, HTTPS encryption, configuration encryption, illegal login lock, IP address filtering, 802.1x authentication, basic and digest authentication for HTTP/RTSP
PoE	Yes , IEEE802.3af
White Light Range	20 ~30 m
Ingress Protection	IP 67
Power Supply	DC12V/PoE
Power Consumption	< 7W
Storage Conditions	- 30 °C ~ 65°C (-22°F~149°F), Humidity: less than 95 % (non-condensing)
Operating Conditions	- 30 °C ~ 60 °C (-22°F~140°F), Humidity: less than 95 % (non-condensing) D
Dimensions (mm)	167.6 × 75 ×74.6
Weight (net)	Approx. 0.40KG
Installation	Ceiling mounting; Wall mounting
Certificate	CE, FCC
Environmental Protection	Directive EU RoHS, WEEE(2012/19/EU) , directive 94/62/EC and REACH(EC1907/2006)