pölló

Prime Series

SMART AUTO-SWITCHING DUAL LIGHT INFRARED/LED

6 Megapixel Dual Light Network Bullet Camera

PLC-426M-AU-DL3/PM

H.265 | WDR | AWB | HLC | BLC | Smart Supplement Light | Motion Detection | PoE | IP67 | VCA | -30°~60°

Key Features:

- 1/2.5 " CMOS Image Sensor
- 3200×1800 Pixels (3K) Resolution
- 0.008 Lux Min. Illumination for Day Time Color View
- 30-meter Dual Night View Range @ 0 Lux
- Motion Detection Alarm Trigger
- Line Crossing Detection
- Region Intrusion Detection
- Highlight Compensation for Image Correction
- Backlight Compensation for Image Correction
- Support SD Card up to 256GB
- ONVIF Protocol Supported
- IP67 Water & Dust Proofing
- DC12V/ PoE (IEEE802.3af) Power Supply

Dimensions:

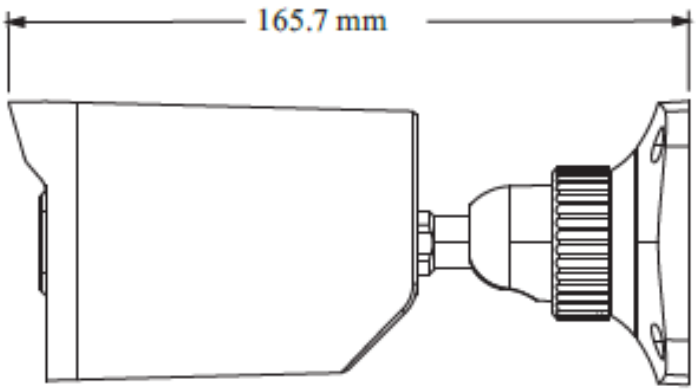

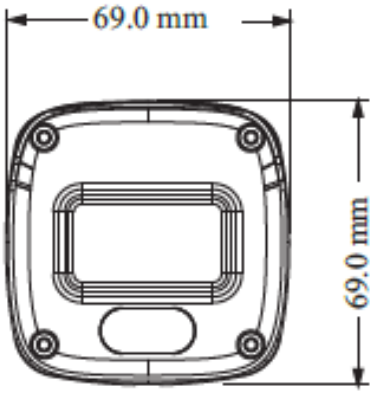

Specifications:

Model	**PLC-426M-AU-DL3/PM-E**
Image Sensor	1 / 2.5 "CMOS
Image Size	3200×1800
Electronic Shutter	1/ 4 s ~ 1 / 100000s
Iris Type	Fixed Iris
Min. Illumination	0.008 lux @F1.6, AGC ON; 0 lux with illumination on
Lens	2.8mm@F1.6, Horizontal FoV: 104°; Vertical FoV:55°;Diagonal FoV:128° 3.6mm@F1.6, Horizontal FoV:78°;Vertical FoV:38°;Diagonal FoV:94°
Focus	Fixed
Lens Mount	M12
Day Night	ICR
Wide Dynamic Range	120dB
BLC	Yes
HLC	Yes
Digital NR	Yes
S/N Ratio	≥50dB
Angle Adjustment	Pan: 0°~360°; Tilt:0°~80°; Rotation: 0°~360°
Video Compression	Main stream: H.265+ / H.265 / H.264+ / H.264 Sub /Third stream: H.265+ / H.265 / H.264+ / H.264 / MJPEG
H.265 Compression Standard	Main Profile@Leve4.1 High Tier
Resolution	6MP (3200 × 1800), 4MP (2688× 1520), 1080P (1920 × 1080), 720P (1280 × 720), D1, VGA (640× 480), 480× 240, CIF
Main Stream	60Hz: 6MP(1~20fps) /4MP/1080P (1~30fps) 50Hz: 6MP(1~20fps) /4MP/1080P (1~25fps)
Sub Stream	720P/D1/VGA/CIF (60Hz: 1~30fps; 50Hz: 1~25fps)
Third Stream	D1/480× 240/CIF (60Hz: 1~30fps; 50Hz: 1~25fps)
Bit Rate	64 Kbps ~8Mbps
Bit Rate Type	VBR / CBR
Image Settings	ROI, Saturation, Brightness, Hue, Contrast, Wide Dynamic, Sharpness, Image Mirror, Image Flip, NR, etc. adjustable through client software or web browser
Audio Compression	G711A/U
ROI	Each ROI to be configured separately
Network	RJ45
Video Output	No
Audio	1CH audio input; 1CH built-in MIC
Reset	Yes
Remote Monitoring	Web browser /Pollo PVMS/Mobile APP
Web Browser	IE (plug-in required)/Google Chrome/Edge/Firefox/Safari
Online Connection	Support simultaneous monitoring for up to 6 users; Support multi-stream real time transmission

Network Protocol	UDP, IPv4, IPv6, DHCP, NTP, RTSP, RTP, RTCP, RTMP, PPPoE, DDNS, SMTP, FTP, 802.1x, SNMP, UPnP, HTTP, HTTPS, HTTP POST, P2P, QoS
Interface Protocol	ONVIF
Storage	Network remote storage
Smart Alarm	Motion detection, SMD
Smart Event	Video Exception (scene change, video blur and abnormal color detection), line crossing /region intrusion detection (human/motor vehicle/non-motor vehicle classification), abandoned/missing object detection
General Function	Watermark, IP address filtering, video mask, heartbeat, system config backup, smart supplement light, corridor pattern
PoE	Yes (IEEE802.3af)
Supplement Light Range	IR range: 20 ~ 30 m; white light range:20 ~ 30 m
Ingress Protection	IP67
SD Card	Support SD Card Up to 256GB
Security	Video encryption, firmware encryption, configuration encryption, illegal login lock, IP address filtering, 802.1x authentication, basic and digest authentication for HTTP
Power Supply	DC12V/PoE
Power Consumption	≤6.5W
Storage Conditions	- 30 °C ~ 65°C (-22°F~149°F), Humidity: less than 95 % (non-condensing)
Operating Conditions	- 30 °C ~ 60 °C (-22°F~140°F), Humidity: less than 95 % (non-condensing)
Dimensions (mm)	167.6 × 75 × 74.6
Weight (net)	Approx. 0.45KG
Installation	Ceiling mounting; wall mounting
Certificate	CE, FCC
Environmental Protection	Complies with Directive EU RoHS, WEEE(2012/19/EU) , directive 94/62/EC and REACH(EC1907/2006)