pöllö

Prime Series

5 Megapixel Network Vandal Proof Dome Camera

PLC-435M-AUK-IR3/PM

H.265 | Day&Night | WDR | AWB | Defog | HLC | BLC | Motion Detection | PoE | IP67 | IK 10 | VCA | -30°~60°

Key Features:

- 1/2.7 " CMOS Image Sensor
- 2592 × 1944 Pixels (3K) Resolution
- 0.02 Lux Min. Illumination for Day Time Color View
- 30-meter IR Night View Range @ 0 Lux
- Motion Detection Alarm Trigger
- Line Crossing Detection
- Region Intrusion Detection
- Highlight Compensation for Image Correction
- Backlight Compensation for Image Correction
- ONVIF Protocol Supported
- IP67 Water & Dust Proofing
- IK10 Vendal Proofing
- DC12V/ PoE (IEEE802.3af) Power Supply

Dimensions:

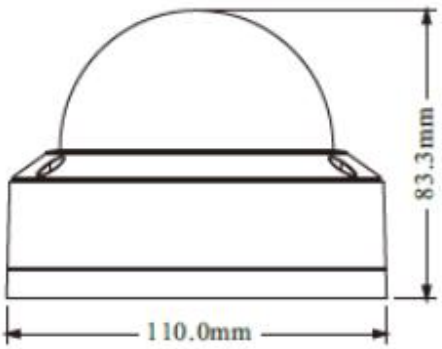

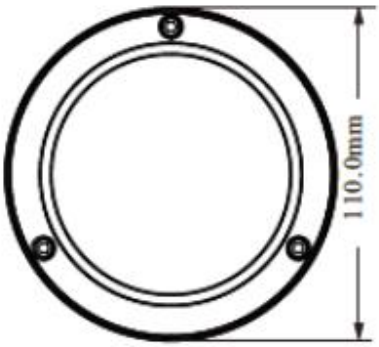

Specifications:

Model	**PLC-435M-AUK-IR3/PM**
Image Sensor	1 / 2.7 "CMOS
Image Size	2592 × 1944
Electronic Shutter	1 /3s ~ 1 / 100000 s
Iris Type	Fixed Iris
Min. Illumination	0.02 lux@F1.6, AGC ON; 0 lux with IR
Lens	2.8 mm@F1.6, horizontal FoV: 99.87°; vertical FoV: 70.36°; diagonal FoV:120°
Focus	Fixed
Lens Mount	M12
Day & Night	ICR
Wide Dynamic Range	120dB
BLC	Yes
HLC	Yes
Defog	Yes
Digital NR	3D DNR
Angle Adjustment	Pan: 0°~355°, Tilt: 0°~67°, Rotation: 0°~355°
Video Compression	Main stream: H.265+ / H.265 / H.264+ / H.264 Sub stream: H.265+ / H.265 / H.264+ / H.264 / MJPEG Third stream: H.265+ / H.265 / H.264+ / H.264 / MJPEG
H.264 Compression Standard	Baseline Profile/Main Profile/High Profile
Resolution	5MP (2592×1944), 4MP (2592×1520), 2K (2560×1440), 3MP (2304×1296),1080P (1920×1080), 720P (1280×720), D1, CIF, 480×240
Main Stream	5MP/4MP/2K/3MP/1080P / 720P (60Hz: 1 ~ 30fps; 50Hz: 1~25fps) HFR mode: 1080P / 720P (60Hz: 1 ~ 60fps; 50Hz: 1~50fps)
Sub Stream	720P/D1/CIF/480×240 (60Hz: 1 ~ 30fps; 50Hz: 1~25fps)
Third Stream	D1/CIF/480×240 (60Hz: 1 ~ 30fps; 50Hz: 1~25fps)
Bit Rate	64 Kbps ~ 8 Mbps
Bit Rate Type	VBR / CBR
Audio Compression	G711A / U
Image Settings	ROI, Saturation, Brightness, Hue, Contrast, Wide Dynamic, Sharpness, Image Mirror, Image Flip, NR, etc. adjustable through client software or web browser
ROI	Each ROI to be configured separately
Perimeter Protection	Line crossing, region entrance/exiting/intrusion (human/motor vehicle/ non-motor vehicle classification)
Statistics	Target counting by line/area, heat map
Exception Detection	Scene change, video blur and video cast detection
Face Detection	Face detection and face capture
Other Events	Abandoned/missing object detection, crowd density detection
Network	RJ45
Video Output	No
Audio	1CH audio input; 1 CH built-in MIC

Storage	Built-in micro-SD card slot; up to 256GB
Reset	Yes
Alarm	1CH alarm input; 1CH alarm output
Remote Monitoring	Web Browser/PVMS Plus/NVR/mobile APP
Web Browser	IE (plug-in required)/Google Chrome/Edge/Firefox/Safari
Online Connection	Support simultaneous monitoring for up to 10 users; Support multi-stream real time transmission
Weight (net)	Approx. 0.65KG
Installation	Ceiling mounting; Wall mounting
Certificate	CE, FCC
Environmental Protection	Directive EU RoHS, WEEE (2012/19/EU), directive 94/62/EC and REACH(EC1907/2006)