pöllö

Prime Series

5 Megapixel Network Dome Motorized Camera

PLC-435M-MZ-IR5/PM

H.265 | Day&Night | WDR | AWB | Defog | HLC | BLC | Motion Detection | PoE | IP67 | VCA | -30°~60°

Key Features:

- 1/2.7 " CMOS Image Sensor
- 2592 × 1944 Pixels (3K) Resolution
- 0.008 Lux Min. Illumination for Day Time Color View
- 50-meter IR Night View Range @ 0 Lux
- Motion Detection Alarm Trigger
- 4X Optical Zoom with 2.8~12mm Varifocal Lens
- Line Crossing Detection
- Region Intrusion Detection
- Highlight Compensation for Image Correction
- Backlight Compensation for Image Correction
- ONVIF Protocol Supported
- IP67 Water & Dust Proofing
- DC12V/ PoE (IEEE802.3af) Power Supply

Dimensions:

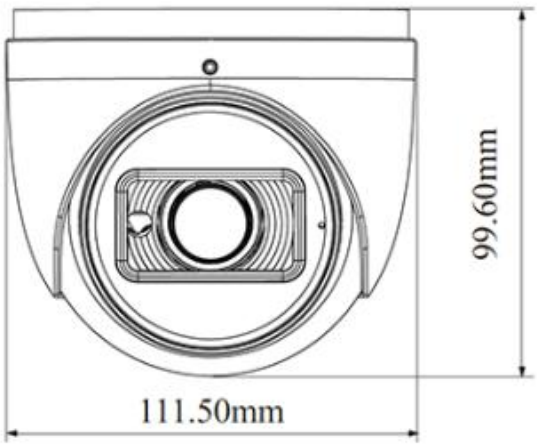

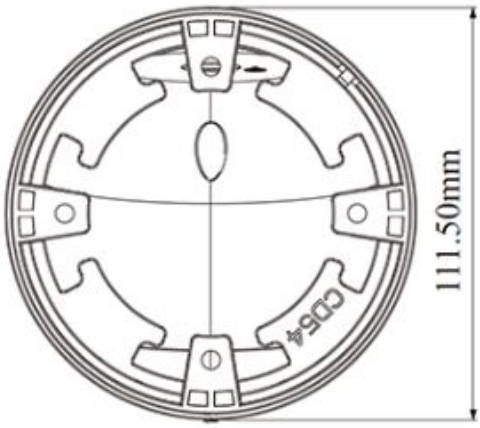

Specifications:

Model	**PLC-435M-MZ-IR5/PM**
Image Sensor	1 / 2.7" CMOS
Image Size	2592 × 1944
Electronic Shutter	1 / 30 s ~ 1 / 100000 s
Iris Type	Fixed Iris
Min. Illumination	0.008 lux@F1.4, AGC ON; 0 lux with IR 0.0045 lux@F1.2, AGC ON; 0 lux with IR
Lens	2.8~12mm@F1.4, motorized
Field of View	Horizontal: 92.7°~29.8°; Vertical: 76.4°~22.6; Diagonal: 105.4°~36.8°
Lens Mount	Ø14
Day & Night	ICR
Wide Dynamic Range	120dB
BLC	Yes
HLC	Yes
Defog	Yes
Digital NR	3D DNR
Angle Adjustment	Pan: 0°~360°; Tilt:0°~80°; Rotation: 0°~360°
Video Compression	Smart H.265 / H.265+ / H.265 / Smart H.264 / H.264+ / H.264 / MJPEG
H.264 Compression Standard	Baseline Profile/Main Profile/High Profile
Resolution	5MP (2592 × 1944), 4MP (2592 × 1520), 2K (2560 × 1440), 3MP (2304 × 1296),1080P (1920 × 1080), 720P (1280 × 720), D1, CIF, 480 × 240
Main Stream	5MP/4MP/2K/3MP/1080P / 720P (60Hz: 1 ~ 30fps; 50Hz: 1~25fps) HFR mode: 1080P / 720P (60Hz: 1 ~ 60fps; 50Hz: 1~50fps)
Sub Stream	720P/D1/CIF/480x240 (60Hz: 1 ~ 30fps; 50Hz: 1~25fps)
Third Stream	D1/CIF/480×240 (60Hz: 1 ~ 30fps; 50Hz: 1~25fps)
Bit Rate	64 Kbps ~ 8 Mbps
Bit Rate Type	VBR / CBR
Audio Compression	G711A / U
Image Settings	ROI, Saturation, Brightness, Chroma, Contrast, Wide Dynamic, Sharpen, NR, etc. adjustable through client software or web browser
ROI	Each ROI to be configured separately
Network	RJ45
Video Output	No
Audio	1CH audio input
Storage	Built-in micro-SD card slot; up to 128GB
Reset	Yes
Remote Monitoring	Web browsing, CMS remote control
Online Connection	Support simultaneous monitoring for up to 10 users; Support multi-stream real time transmission
Network Protocol	UDP, IPv4, IPv6, DHCP, NTP, RTSP, RTP, RTCP, ICMP, IGMP, FTP, PPPoE, DDNS, SMTP, SNMP, HTTP, 802.1x, UPnP, HTTPs, QoS
Video Abnormality	Scene change detection, video blur detection, video colour cast detection

Perimeter Detection	Line crossing detection (human/vehicle classification); Region intrusion/ entrance/exiting detection (human/vehicle classification
Sound Light Warning	Yes
Interface Protocol	ONVIF
Storage	Network remote storage; micro-SD card storage
Smart Alarm	Motion detection, SD card error, SD card full, IP address conflict, Cable connection
General Function	Watermark, IP address filtering, video mask, heartbeat, password protection, non-photosensitive switch, image distortion correction
PoE	Yes, IEEE802.3af
IR Distance	30 ~ 50 m
Ingress Protection	IP67
Power Supply	DC12V/PoE
Power Consumption	< 11W
Operating Environment	- 30 °C ~ 60°C (-22 °F~140°F) E42Humidity: less than 95 % non condensing
Dimensions (mm)	217.7 × 80.5 × 80.5
Weight (net)	Approx. 0.65KG
Installation	Ceiling mounting; Wall mounting
Certificate	CE, FCC
Environmental Protection	Complies with Directive EU RoHS, WEEE (2012/19/EU), directive 94/62/EC and REACH(EC1907/2006)