pöllö

Prime Series

4 Megapixel 32x AI PTZ Camera

PLC-9432-AI-IR15/PM

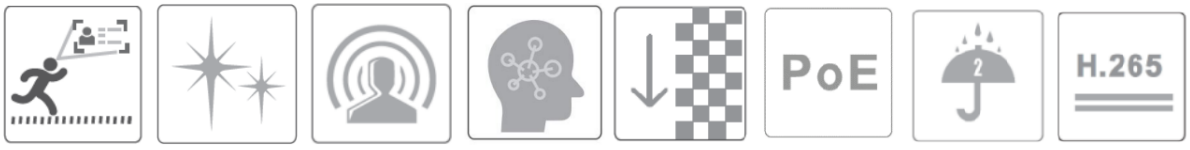

Smart Tracking | Starlight | True WDR | VCA | 3D DNR | PoE++ | IP67 | H.265

Key Features:

- 1/2.5” CMOS Image Sensor
- 2560x1440 Pixels (2K) Resolution
- 0.003 Lux Min. Illumination for Day Time Color View
- 150-meter IR Night View Range
- 32X Optical Zoom with 4.7~150mm Varifocal Lens
- Support Face Detection, Capturing and Comparison
- Smart tracking of human and vehicles
- Support smart detection and perimeter protection
- Motion Detection Alarm Trigger
- Line Crossing Detection
- Region Intrusion Detection
- Highlight Compensation for Image Correction
- Backlight Compensation for Image Correction
- ONVIF Protocol Supported
- IP67 Water & Dust Proofing
- PoE (IEEE802.3af)

Dimensions:

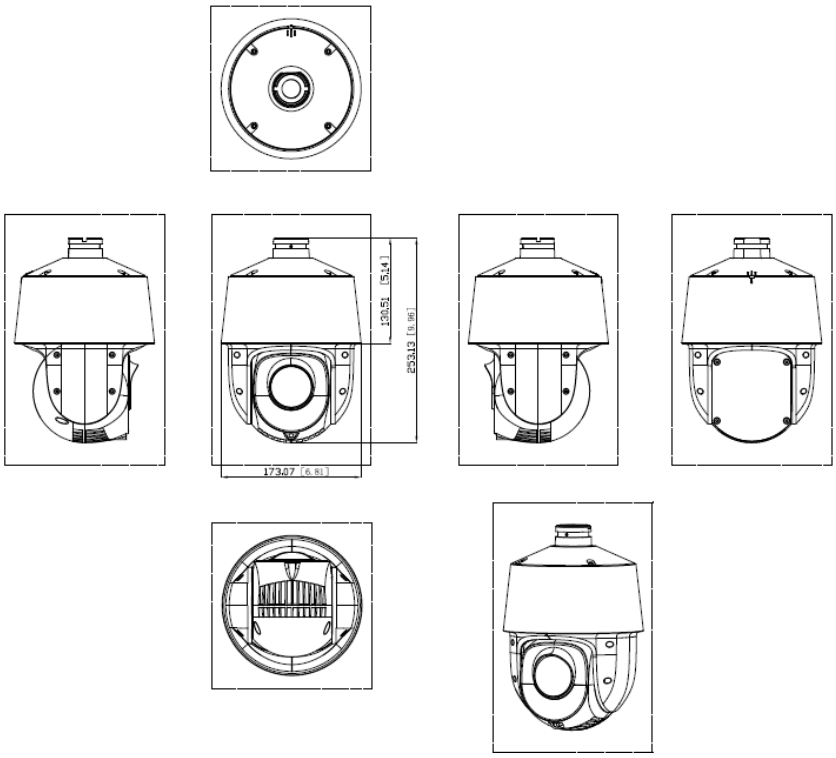

Specifications:

Model	**PLC-9432-AI-IR15/PM**
Image sensor	1/2.5” progressive scan CMOS
Mini. Illumination	Color：0.01Lux @ (F1.65, AGC ON) ；B/W：0.002Lux @ (F1.65, AGC ON);0Lux with IR
Image setting	Flip, Mirror, Saturation, Brightness, Contrast, Sharpness, AGC, and AWB adjusted by client software/browser
Shutter Speed	1/1 s – 1/10,000 s
White Balance	Auto/Manual/Indoor/Outdoor
Gain	Auto/Manual
Day & Night	IR Cut filter
Digital Zoom	16x
Privacy Mask	4 Programmable privacy masks
3D DNR	Auto/Manual
BLC	Yes
HLC	Yes
WDR	120 dB
Defog	Electronic
Regional Exposure	No
Picture overlay	Logo picture could be overlaid on video with 128x128pixels,24bits BMP format
Focus length	f=4.7-150mm lens,32x optical
Zoom Speed	Approx. 4s (optical zoom, wide-tele)
Field of View	Horizontal:55° to 2.4°(wide-tele) Vertical: 33° to 1.4°(wide-tele) Diagonal: 61.5° to 2.8°(wide-tele)
Working distance	wide: 1.0m ~ INF; tele: 1.5m ~ INF
Aperture Range	F1.5 ~ F4 (wide-tele)
Pan Range	360°endless
Pan speed	Configurable, from 0.1~80°/s; pre-set speed: 150°/s
Tilt Range	From -3° to 90°
Tilt Speed	Configurable, from 0.1°~ 80°/s, pre-set speed: 120°/s
Proportional Zoom	Yes
pre-set	360
Cruise	8 cruises, up to 16 pre-sets for each cruise
Track	4 tracks, record time over 3 minutes for each track
Power off memory	Support
Action mode	pre-set/Cruise/Track/Auto Scan/Random Scan
3D Positioning	Support
PTZ Position Display	Support
Schedule Task	pre-set/Cruise/Track/Random Scan/Boundary Scanning /Dome reboot
IR Distance	150m
Smart IR	Yes, support facial exposure
Max Resolution	2560× 1440
Main stream	2560× 1440,2048× 1536,1920× 1080,1280× 960,1280× 720 (25/30 fps)

Sub stream	25fps (704 × 576, 640 × 480, 352 × 288) 30fps (704 × 480, 640 × 480, 352 × 240)
Third Stream	25fps (1920 × 1080, 1280 × 960, 1280 × 720, 704 × 576, 640 × 480, 352 × 288) 30fps (1920 × 1080, 1280 × 960, 1280 × 720, 704 × 480, 640 × 480, 352 × 240)
SVC	Yes
Video compression	Smart H.265+/H.265/H.264/MJPEG
Audio compression	G.711 A/U
Audio Enhancement	No
Protocols	HTTP, HTTPS, IPv4/IPv6, 802.1x, QoS, FTP, SMTP, UPnP, SNMP, DNS, DDNS, NTP, RTSP, RTCP, RTP, TCP/IP, UDP, IGMP, ICMP, DHCP, PPPoE
Simultaneous live view	Up to 6 channels
User / Host	Up to 16 users, 3 levels: Administrator, Advanced User and Normal User
Security Measures	User authentication (ID and PW), Host authentication (MAC address); HTTPS encryption, IEEE802.1x port-based network access control; IP address filtering
Basic event	Motion detection, video tampering alarm, exception (network disconnected, IP address conflict, SD full, SD error), defocus detection
Face recognizes	Default off, max 30 human faces per second
People Density	Not support by this version
Smart Detection	Intrusion detection, Line crossing detection, Region entrance detection, Region exiting detection, Unattended baggage detection, Object removal detection, Scene change detection, Support alarm triggering by human or vehicle, filtering flag/animal.
Smart Tracking	Manual Tracking, Auto Tracking (human or vehicle by software setting)
Alarm Interface	1 Alarm input; 1 Alarm output
Audio Interface	1 audio input (mic in); 1 audio output, line level, impedance,600Ω
Alarm Linkage	Alarm actions, such as pre-set, Cruise, Track, Memory Card Video Record, Trigger Recording, Notify Surveillance Center, Upload to FTP/Memory Card, Send Email, etc
Network Interface	1 RJ45 10M/100M Adaptive Ethernet (Support PoE 802.3.at, class 3)
Storage	One MicroSD/SDHC/SDXC card slot, up to 256G
API	ONVIF, support Pollo SDK and third-party management platform
Client	PVMS Plus and the third-party client
Web Browser	IE8-11, Chrome41.0-44, Firefox30.0-51, Safari8.0-11
Power	DC24V, AC24V or PoE+ (802.3.at, class 3), (Max 30W, include IR, Heater, Fan working, max 9W for IR)
Working condition	-30°C ~ 60°C (-22°F ~ 140°F),90%RH less (non-condensing), Cold start at - 25°C
Storage condition	-40°C ~ 65°C; ≤ 95% RH
Protection	IP67, 6000V Lightning Protection, Surge Protection and Voltage Transient Protection
Material	Aluminium Alloy; PC+GF10%
Dimensions	Φ 209mm × 328mm (8.22" Φ × 12.91 ")
Weight	Approx. 3.8 Kg (8.38 lb.)
Certification	IP67, ROHS, CE, FC