pöllö

Prime Series

4 Megapixel 4x Mini PTZ Camera

PLC-9225-AI-IR15/PM

Smart Tracking | Starlight | WDR | Auto Day/Night | Active Deterrence | PoE+ | IP66 | H.265

pöllö

DATASHEET

Key Features:

- 1/2.7” CMOS Image Sensor
- 2560x1440 Pixels (2K) Resolution
- 0.01 Lux Min. Illumination for Day Time Color View
- 50-meter Dual Night View Range
- 4X Optical Zoom with 2.8~12mm Varifocal Lens
- Support Bi-directional audio
- Built-in Mic and Speaker for twoway talk
- AI-based human vehicle detection & classification and tracking
- Motion Detection Alarm Trigger
- Line Crossing Detection
- Region Intrusion Detection
- Highlight Compensation for Image Correction
- Backlight Compensation for Image Correction
- ONVIF Protocol Supported
- IP67 Water & Dust Proofing
- PoE (IEEE802.3af)

Dimensions:

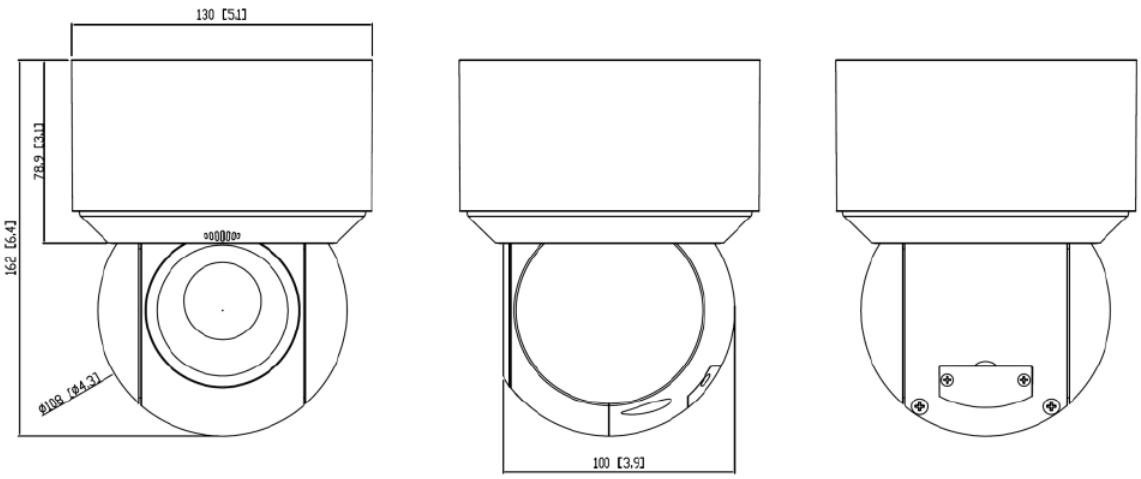

Specifications:

Model	**PLC-944-AD-DL5/PM**
Image Sensor	1/2.7" progressive scan CMOS with BSI and NIR+ technology
Mini. Illumination	Colour 0.01 Lux @ (F1.6 AGC ON) B/W 0.002Lux @ (F1.6 AGC ON);0Lux with IR
Image Setting	Flip, Mirror, Saturation, Brightness, Contrast, Sharpness, AGC, and AWB adjusted by client
Shutter Speed	50Hz: 1/25s~1/25,000s, 60Hz: 1/30s~1/30,000s
White Balance	Auto/Manual/Indoor/Outdoor
Gain	Auto/Manual
Day & Night	Auto/Manual
S/N Ratio	≥52dB
3D DNR	Auto/Manual
AE Enhancement	BLC, HLC, WDR
Privacy Mask	4 Programmable privacy masks
Picture Overlay	Logo picture could be overlaid on video with 128x128pixels, 24bits JPG format
Font Overlay	Max 15characters per line, 8 lines max, white colour or red colour
Focus Length	f=2.8-12mm lens,4x optical
Zoom Speed	About 1.6s (Wide->tele)
Field of View	Horizontal: 97° to 31°±5%; Vertical: 51° to 18°±5%; Diagonal: 115° to 36°±5% (wide-tele)
Working Distance	Wide: 0.3m ~ INF; tele: 0.5m ~ INF
Aperture Range	F1.6~ F2.7 (wide-tele)
IR Cut Filter	Electrical switchable ICR
Pan Range	0~355°
Pan Speed	Configurable, from 0.1~80°/s; Pre-set speed: 80°/s
Tilt Range	From -5° to 90°
Tilt Speed	Configurable, from 0.1°~ 60°/s, pre-set speed: 60°/s
Pan/Tilt Action Interval	At least 10 seconds, adjustable
Proportional Zoom	Yes
pre-set	300
Cruise	8 cruises, up to 16 pre-sets for each cruise
Trace	4 traces, record time over 3 minutes for each trace
Power-off Memory	Support
Action Mode	pre-set/Cruise/Trace/Auto Scan/Random Scan
3D Positioning	Support
PTZ Position Display	Support
Schedule Task	pre-set/Cruise/Trace/Random Scan/Boundary Scanning /Dome reboot
IR Distance	Up to 50m,4pcs of IR array into 2 groups, auto switch with zoom ratio
Smart IR	Yes
White Light Distance	Up to 30m, 2pcs of White LED Array
White Light Mode	Flashing mode, torque mode, time interval adjustable
Max Resolution	2560×1440

Main Stream	25fps (2560×1440, 2048×1536, 1920×1080, 1280×960, 1280×720); 30fps (2560×1440, 2048×1536, 1920× 1080, 1280× 960, 1280× 720)
Sub Stream	25fps (704 × 576, 640 × 480, 352 × 288) 30fps (704 × 480, 640 × 480, 352 × 240)
Third Stream	25fps (1280 × 720, 704 × 576, 640 × 480, 352 × 288) 30fps (1280 × 720, 704 × 480, 640 × 480, 352 × 240)
Video Compression	Smart H.265+/H.265/H.264+/H.264/MJPEG
H.264 Encoder	H.264/AVC codec BP/MP/HP, level 5.1
H.265 Encoder	H.265/HEVC codec MP, level 5.0
Video Bit rate	64Kbps ~ 16Mbps
Audio Compression	G.711 A/U
Audio Bit rate	64Kbps
Protocols	HTTP, HTTPS, IPv4/IPv6, 802.1x, QoS, FTP, SMTP, UPnP, SNMP, DNS, DDNS, NTP, RTSP, RTCP, RTP, TCP/IP, UDP, IGMP, ICMP, DHCP, PPPoE
User / Host	Up to 16 users, 3 levels: Administrator, Advanced User and Normal User
Security Measures	User authentication (ID and PW), Host authentication (MAC address); HTTPS encryption, IEEE802.1x port-based network access control; IP address filtering
Basic Event	Motion detection, video tampering alarm, exception (network disconnected, IP address conflict, SD full, SD error)
Face Recognition	Default do not support human face detection capture, face comparison (customized per request)
Road Traffic	Vehicle detecting and tracking, etc.
Smart Detection	Tripwire, Bi-directional tripwire, Illegal intrusion detection, Region entrance detection, Region exiting detection, etc.
Smart Tracking	Smart tracking of human or vehicle, auto/manual
Active Deterrence	Flash strong white light and predefined voice upon invaders detected. Support 10+ different predefined voice clips
Two-way talk	Support two-way talk
Ext. Audio Interface	1-ch audio input (mic in),2.0-2.4Vp-p,1kΩ±10%;1-ch audio output (line out), line level, impendance:600 Ω;
Built-in speaker	Yes, One Speaker, 4Ω, 2.5Watt. Rotation with camera, up to 30m distance audible
Built-in MIC	1channel, rotation with camera lens direction, up to 8m distance voice recordable.
Audio device switch	Default use built-in speaker and MIC, manually switch to external
Alarm interface	1CH alarm input (Dry contact); 1CH alarm output
Alarm Linkage	Alarm actions, such as pre-set, Cruise, Trace, Memory Card Video Record, Trigger Recording, Notify Surveillance Center, Upload to FTP/Memory Card, Send Email, etc.
Network Interface	1 RJ45 10M/100M Adaptive Ethernet (Support PoE+)
Storage Slot	Standalone memory card chamber, support micro-SD/TF card, up to 256GB
Reset Button	Yes
Heat and Fan	Built-in temperature sensor, auto shut down at over-temperature; auto heat at cold start. No built-in fan.

Water Removal	Dust and Water-resistant coating
API	ONVIF, support Pollo SDK and third-party management platform
Client	PVMS Plus and the third-party client, free iOS and Android APP
Web Browser	IE8-11, plug-in free
App Version	5.1.1 and later
Languages	Czech; English, German; Hungarian; Italian; Japanese; Korean; Portuguese, Polish; Russian, Romanian, Spanish; Spanish (Mexico); Simplified Chinese; Turkish; Traditional Chinese. etc.
Power	DC12V±20%, 2000mA,orPoE+ (802.3.at,class 3), AVG 3.3W, MAX14.9W at day;18.9W at night(LED on+ Speaker on + PTZ working)
Working Condition	-40°C ~ 65°C (-40°F ~ 149°F) IR off, -40°C ~ 55°C IR on; Cold start≥- 25°C(1Hour waiting), ≤90%RH
Storage Condition	-40°C ~ 70°C ; ≤ 95% RH
Protection	6000V Lightning Protection, Surge Protection and Voltage Transient Protection
Shield Material	Main body: Aluminium Alloy(ADC12),Decoration: Polymer(Glass fiber and Plastic)
Dimensions	130mm x 162mmH (5.1’x 6.4’)
Net Weight	Approx. 1.2Kg (2.645lb.)
Certification	IP66,IK10(include lens window), ROHS, CE, FC,UKCA