Face Smart - Visible Light Indoor Facial & Palm Recognition

PLF-10K-VLP

pöllö

DATASHEET

Face Smart - Visible Light Indoor Facial & Palm Recognition PLF-10K-VLP

- Advanced biometric access control terminal
- Dual-core 1.2GHz CPU and stable Linux OS
- Equipped with a 5-inch TFT IPS touch screen for clear visuals
- Built-in dual (binocular) 1MP camera enabling face recognition and live detection
- Memory configuration of 256MB RAM and 8GB ROM
- Supports nighttime filling light
- Support photosensitive sensor for low-light environments
- Uses dynamic face detection and tracking algorithms
- High-speed recognition with ~20ms face detection
- 300ms feature extraction, and ~1s comparison
- Supports face recognition scene photo saving
- Multiple authentication face, palm vein, fingerprint, card, and password
- Large capacity support for 10,000 users
- 6,000 faces, 3,000 palms, and 10,000 fingerprints
- Supports 10,000 cards and passwords
- Stores up to 200,000 transaction logs for attendance
- Recognition distance ranges from 0.5 to 2 meters
- Live detection optimized at 0.5–1 meter
- Designed for indoor use with wide operating range from –30°C to +60°C
- Supports built-in WiFi, along with TCP/IP, USB 2.0
- Compatible with external ID/IC card readers
- Supports serial port, RS485, and Wiegand 26/34
- Full access control I/O including electric lock, door sensor, exit button
- Supports LAN-based device deployment
- Allows screen display content and recognition

Specifications:

Hardware	CPU	Dual-Core 1.2GHZ
	Operating system	LINUX
	LCD display	5" TFT IPS touch color screen (720*1280)
	Camera	Binocular camera (Dual) 1 Megapixel
	RAM	256MB
	ROM	8G
Capacity	User	10,000
	Face	6,000
	Palm	3,000
	Fingerprint	10,000
	Password	10,000
	Cards	10,000
	Logs	200,000
Operating	Power supply	DC12V / 2A
	Recognition distance	0.5-2 meters (Live detection: 0.5~1meter)
	Operating temperature	-30 ° C - + 60 ° C
	Working humidity	10%~90%
	Use environment	Indoor
Communication	Communication mode	TCP/IP, USB 2.0, U-disk, WiFi
	Access Control Output	Wiegand26/34, RS485, door magnetism, electric lock, open button, electric bell, door bell, SPK

Dimensions:

Application:

Type 1 :

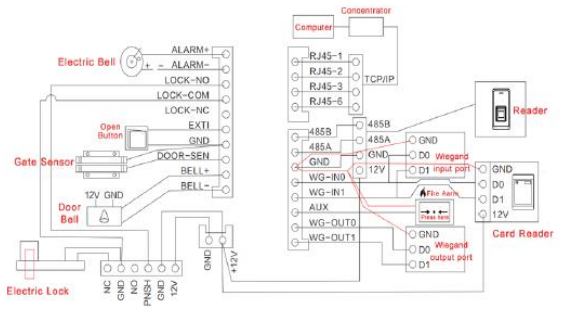
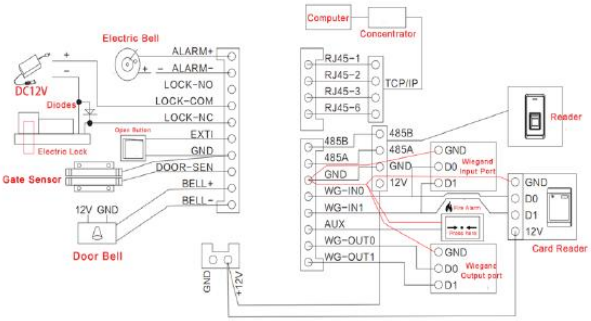
Type 2 :